Table of Content 2149110

1. User manual 2
2. Legal regulations 3
3. Safety instructions 4
4. Application 5
5. Functional principle 6
6. Technical data 7
7. Performance graph 8
8. Mounting 9
9. Condensate management 10
10. Mounting Principle 11
11. Cut Out Dimension 12
12. Electrical Connection 13
13. Wiring Diagram 14
14. Taking into Operation 15
15. Maintenance 17
16. Transport & Storage 17
17. Parts supplied / Spare parts / Accessories 18

1. User manual

This instruction manual contains information and instructions to enable the user to work safely, correctly and economically on the unit. Understanding and adhering to the manual can help one:

- Avoid any dangers.
- Reduce repair costs and stoppages.
- Extend and improve the reliability and working life of the unit.

PLEASE ENSURE TO USE THE RIGHT VERSION OF THE INSTRUCTION MANUAL SUITABLE FOR YOUR UNIT.

Intended use
The unit is to be used exclusively for the dissipation of heat from control cabinets and enclosures (stationary, not moving) in order to protect temperature sensitive components in an industrial environment. To meet the conditions of use, all the information and instructions in the instruction manual must be adhered to.

General danger
Indicates compulsory safety regulations which are not covered by a specific pictogram such as one of the following.

High electric voltage
Indicates electric shock danger.

Important safety instruction
Indicates instructions for safe maintenance and operation of the unit.

Attention
Indicates possible burns from hot components.

Attention
Indicates possible damage to the unit.

Instruction
Indicates possible danger to the environment.

2. Legal regulations

Liability
The information, data and instructions contained in this instruction manual are current at the time of going to press. We reserve the right to make technical changes to the unit in the course of its development. Therefore, no claims can be accepted for previously delivered units based on the information, diagrams or descriptions contained in this manual. No liability can be accepted for damage and production caused by:

- Disregarding the instruction manual
- Operating error
- Inappropriate work on or with the unit
- The use of non-specified spare parts and accessories
- Unauthorised modifications or changes to the unit by the user or his personnel

The supplier is only liable for errors and omissions as outlined in the guarantee conditions contained in the main contractual agreement. Claims for damages on any grounds are excluded.

3. Safety instructions

Upon delivery the unit is already meeting current technical standards and can therefore be safely taken into operation. Only authorised personnel is allowed to work on the unit. Unauthorised personnel must be prohibited from working on the unit. Operating personnel must inform their superiors immediately of any malfunction of the unit.
Please note that before starting to work on or with the unit, a procedure must be carried out inside the cabinet on which the unit is to be mounted.
Before commencing work inside the cabinet, the control cabinet manufacturer's instruction must be read with regards to:

- Safety instructions.
- Instructions on taking the cabinet out of operation.
- Instructions on the prevention of unauthorised cabinet reconnection.

The electric equipment meets the valid safety regulations. One can find dangerous voltages (above 50 V AC or above 100 V DC)

- Behind the control cabinet doors.
- On the power supply in the unit housing.

The unit has to be operated according to the type plate and the wiring diagram, and must be protected externally from overloading and electrical faults via suitable protective devices.

Danger through incorrect work on the unit
The unit can only be installed and maintained by technical competent and qualified personnel, using only supplied material according to the supplied instructions.

Danger from electrical voltage
Only specialised personnel are allowed to maintain and clean the unit. The personnel must ensure that for the duration of the maintenance and cleaning, the unit is disconnected from the electrical supply.

Attention
Damage to the unit through the use of inappropriate cleaning materials. Please do not use aggressive cleaning material.

Instruction
Damage to the environment through unauthorised disposal. All spare parts and associated material must be disposed according to the environmental laws.

4. Application

Air - water heat exchangers are intended as complementary accessories to large industrial equipment which include a motor-operated fan or blower together with a cooling heat exchanger. These may also include an electric heater. The fan or blower is intended to recirculate air and allow heat exchange. The heat exchanger is designed for chilled water or anti-freeze/corrosion inhibitor mixed water from a separate source.
The cooling function may be controlled by an on-board or remote controller or thermostat, a thermostatically controlled valve or an electrically controlled valve. Heating function, when installed is provided by an electrical heating element. The unit seals the cabinet which ensures that the clean air inside does not come into contact with the ambient air which may well be dirty or polluted. The unit is fit for purpose within the rated/declared ambient conditions (e.g. dusty and oily air or high air temperatures between 1°C and 72°C), also indicating the rated allowable ingress and environment.

Water quality
To ensure the maximum lifetime of an air-water heat exchangers, it is important to supply cooling water in conformity with the VGB Cooling Water Guidelines (VGB-R 455 P). The cooling water used must be soft enough to avoid scale deposits, but should not be too soft as this would corrode the heat exchanger. Where the cooling water is cooled for reuse, part of the water has to be changed with fresh water to prevent the concentration of hardness and salt content which makes the water more corrosive.
The main impurities and possible methods of eliminating them are given in the table below:

Pollution of the water	**Method of elimination**
Mechanical impurities (dp > 2mm)	Filtration of the water
Excessive hardness	Softening of the water by ion exchange
Moderate content of mechanical impurities and hardness formers	Addition of dispersants or stabilisers
Moderate content of chemical impurities	Addition of passivators and inhibitors
Biological impurities (bacteria and algae)	Addition of biocides

When the water is re-cooled, it is recommended that the water condition is maintained as close as possible to the following list of hydrological data:

Hydrological data		
pH-values	7 - 8.5	
Carbonate hardness	>3 <8	°dH
Free carbon dioxide	8 - 15	mg/dm³
Associated carbon dioxide	8 - 15	mg/dm³
Aggressive carbon dioxide	0	mg/dm³
Sulphides	free	mg/dm³
Oxygen	< 10	mg/dm³
Chloride ions	< 50	mg/dm³
Sulphate ions	< 250	mg/dm³
Nitrates and nitrites	< 10	mg/dm³
COB	< 7	mg/dm³
Ammonia	< 5	mg/dm³
Iron	< 0.2	mg/dm³
Manganese	< 0.2	mg/dm³
Conductivity	< 2200	µS/cm
Solid residue from evaporation	< 500	mg/dm³
Potassium manganate consumption	< 25	mg/dm³
Suspended matter	< 3	mg/dm³
(part flow cleaning recommended)	> 3 < 15	mg/dm³
(continuous cleaning)	> 15	mg/dm³

5. Functional principle

The air inside the control cabinet is moved over a laminar heat exchanger through which a coolant medium runs, making use of the counter-flow principle. The fan blows the warm air along the aluminium fins of the heat exchanger; it cools down and is then returned into the cabinet. The heat exchanger fan runs constantly, providing continuous circulation of the air in the cabinet. This circulation prevents hot spots within the control cabinet. During this process, the coolant heats up and is returned to the coolant supply system at an increased temperature.
In order to save operating costs, and in the interests of environmental protection, the water temperature can be reduced by re-cooling systems or cold water sets so that it can be reused in the heat exchanger. This process involves the water circulating in a closed circuit.

1. Air intake cabinet side
2. Radial fan cabinet side
3. Heat exchanger
4. Air outlet cabinet side
5. Water in
6. Water out

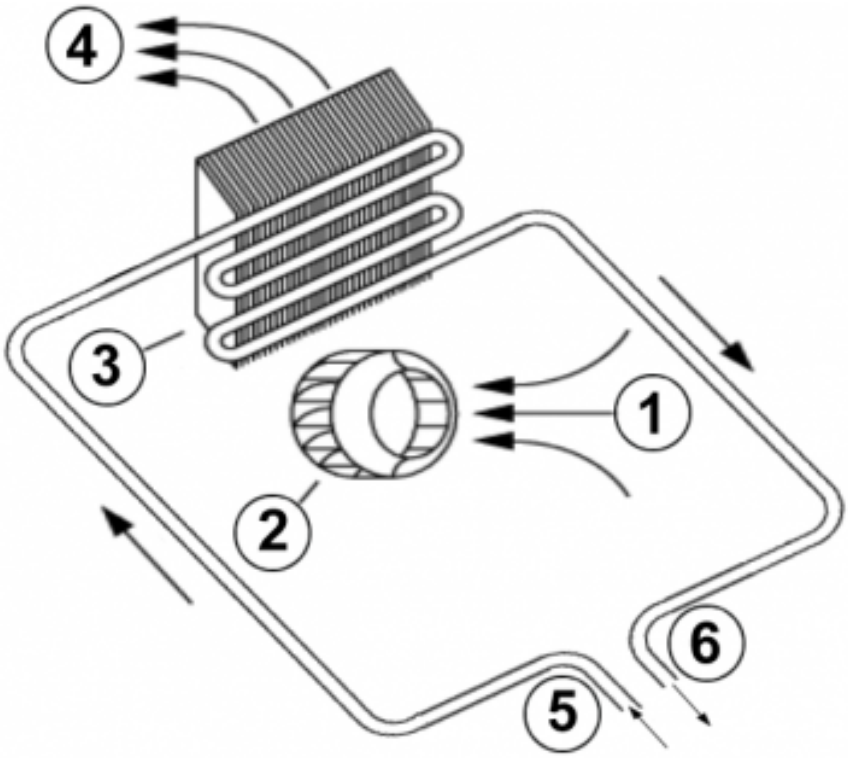

6. Technical data

Order Number	2149110
Cooling capacity L35W10 (200 l/h)	4.8 kW
Cooling capacity L35W10 (500 l/h)	5.6 kW
Coolant	Water, light oils or similar
Operating Temperature Range	1°C - 72°C
Air flow volume (system / unimpeded)	980 / 1500 m³/h
Mounting	Wall mounted
Housing Material	Mild steel, powder coated
Dimensions A x B x C (D+E)	1,400 x 460 x 242 mm
Weight	33 kg
Voltage / Frequency	120 V ~ 60 Hz
Starting current	5 A
Max. current	2.6 A
Max. power	300 W
Pressure water circuit	10 bar
Water connection	1/2" - inside thread with 2 connectors for pipe internal diameter of 13 mm
Fuse	6 A (T)
Connection	Connection terminals
Ingress Protection	IP 55
Approvals	CE

7. Performance graph

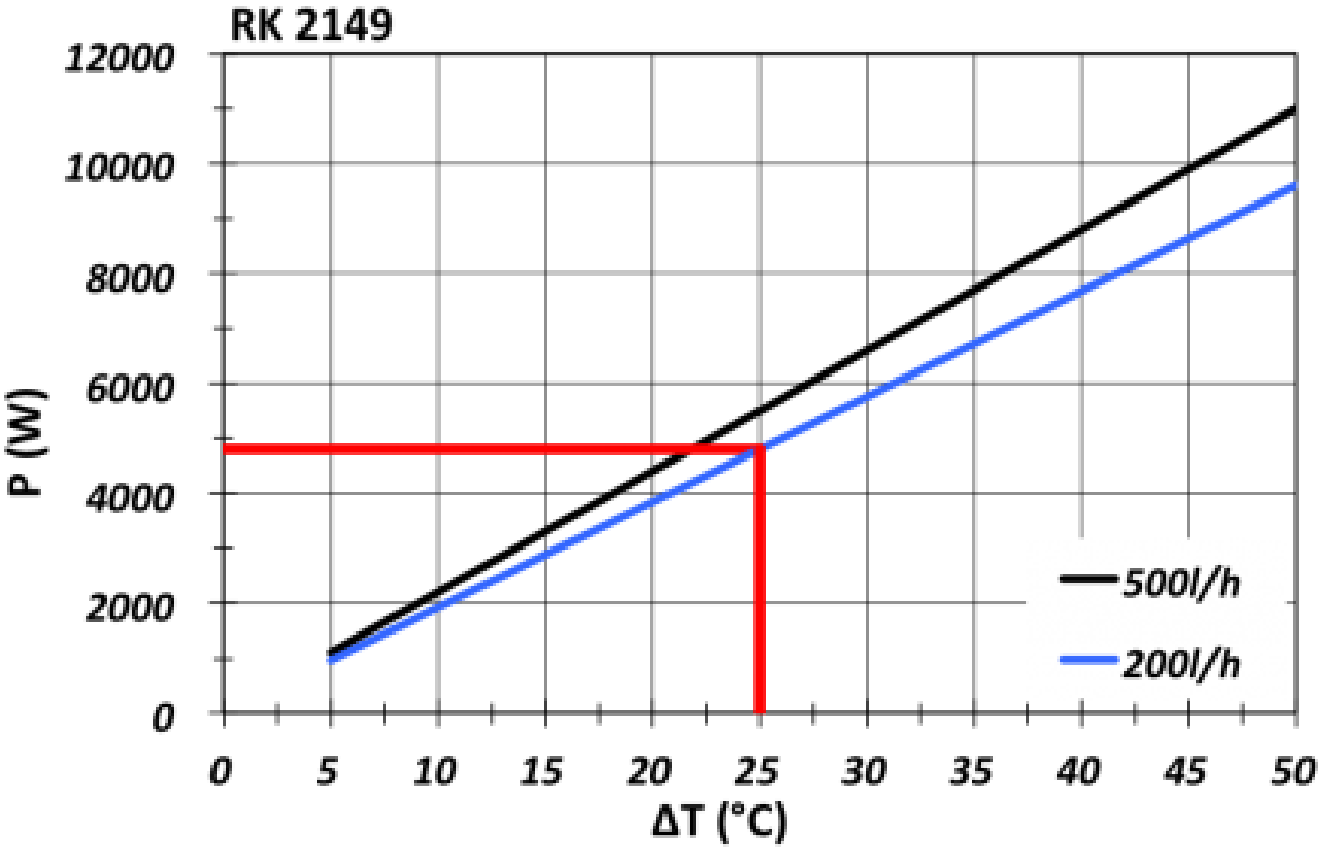

8. Mounting

The power supply rating on unit rating plate must comply with mains rating.

Always disconnect the power supply before opening the unit.

Seifert heat exchangers have an extremely compact design and construction, giving them the advantage of occupying very little space. In addition, the RK-2114 A/AM, RK-2114 A/AM 632 and RK-2116 A/AM models can be mounted externally or internally, as required.
To achieve a good seal between the control cabinet and the heat exchanger, the unit's mounting surface on the control cabinet may need to be reinforced. The air intake and outlet must not be obstructed by equipment inside the control cabinet, so that the air is mixed thoroughly and thermal stratification is avoided.
For the heat exchanger to work perfectly, the cabinet must be completely sealed from its surroundings. An imperfectly sealed control cabinet will result in an increased level of condensation. The control cabinet should have a minimum of IP54 protection, in accordance with IEC 60 529.

Use of the mounting template
The mounting template enables the unit to be installed quickly. For mounting the template should be attached to the wall of the cabinet and the holes for the fixing screws should be drilled in the wall of the cabinet in the marked positions.

Cooling medium connection
There are two pipe connection points on the bottom (RK-2114, 2116, 2120, 2130,2140) or in the side (RK-2124) of the unit to connect the refrigerant supply. The piping used for the supply must have an internal diameter of 10 mm or 13 mm depending on the model. The pipe connectors have a ¼” thread (1/2" RK 2125948 / RK 21259500 / RK 2149) and can be replaced with other connectors for larger or smaller pipe diameters. Before connecting the coolant circuit, note the flow direction of the coolant medium. Next to the pipe connectors, the letters “E” and “A” are visible on the unit.

E coolant intake
A coolant outflow

To empty the unit connect the water inlet pipe to a compressed air supply and route the water outlet pipe to a location where the water can be drained. Set the thermostatic head inside the unit to a set-point lower than ambient temperature to ensure it opens and slowly open the compressed air supply till all the water in the heat exchanger is flushed out. Ensure that the pressure of the system is below the rated pressure of the unit and fitting.

9. Condensate management

Condensation & cleaning drain pipe connection

The condensation and cleaning drain is in the base of the unit. The drain pipe should be attached as required.

To install a drain pipe, please follow below steps:

1. Remove the plastic stopper from in the base of the unit (factory setting is locked)
2. Dispose the plastic stopper but keep the Silicon washer
3. Insert the drain connector
4. Lock it clockwise and fix the drain pipe onto it

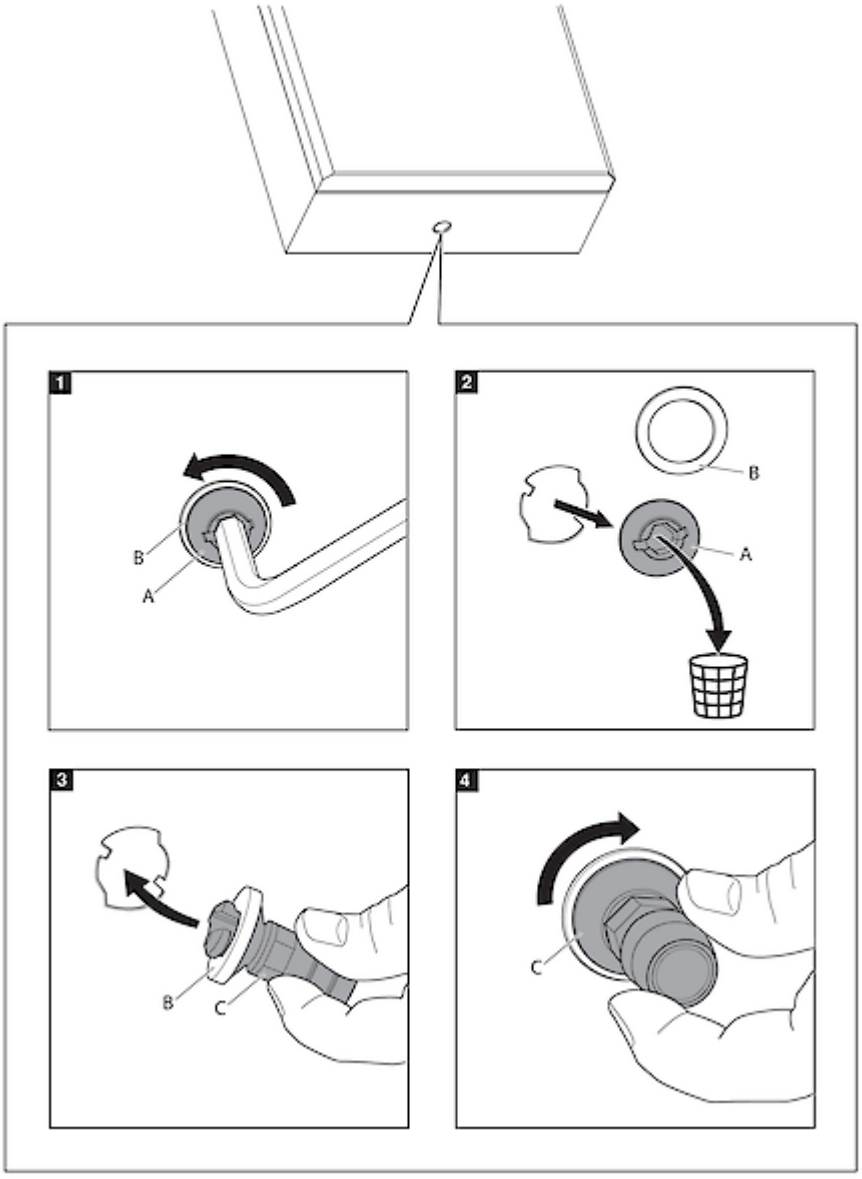

10. Mounting Principle

1 Mounting gasket
2 Heat exchanger
3 Set screw
4 Washer
5 Lock nut

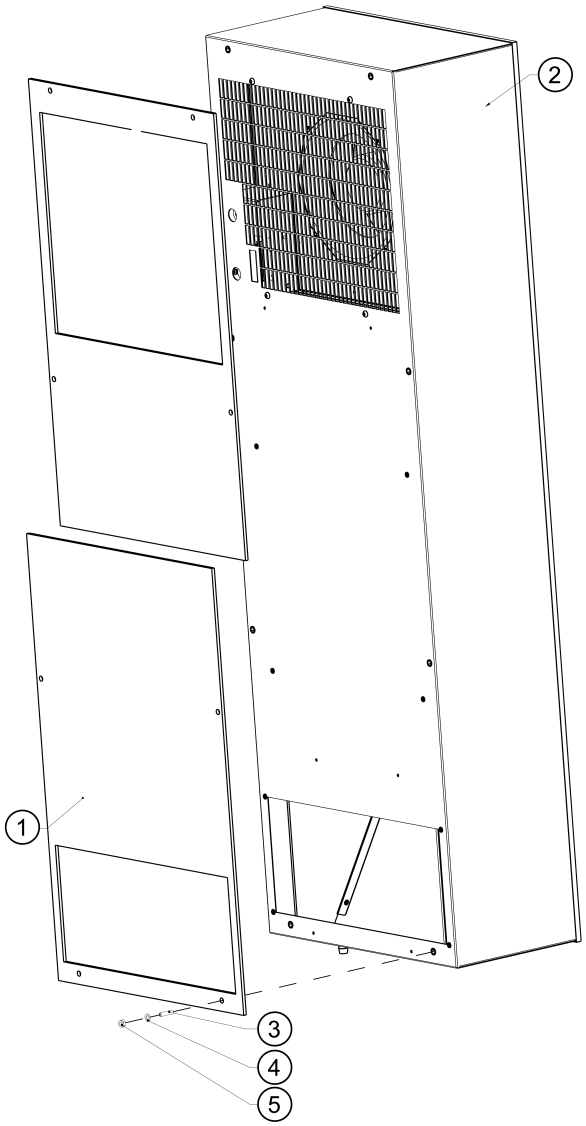

11. Cut Out Dimension

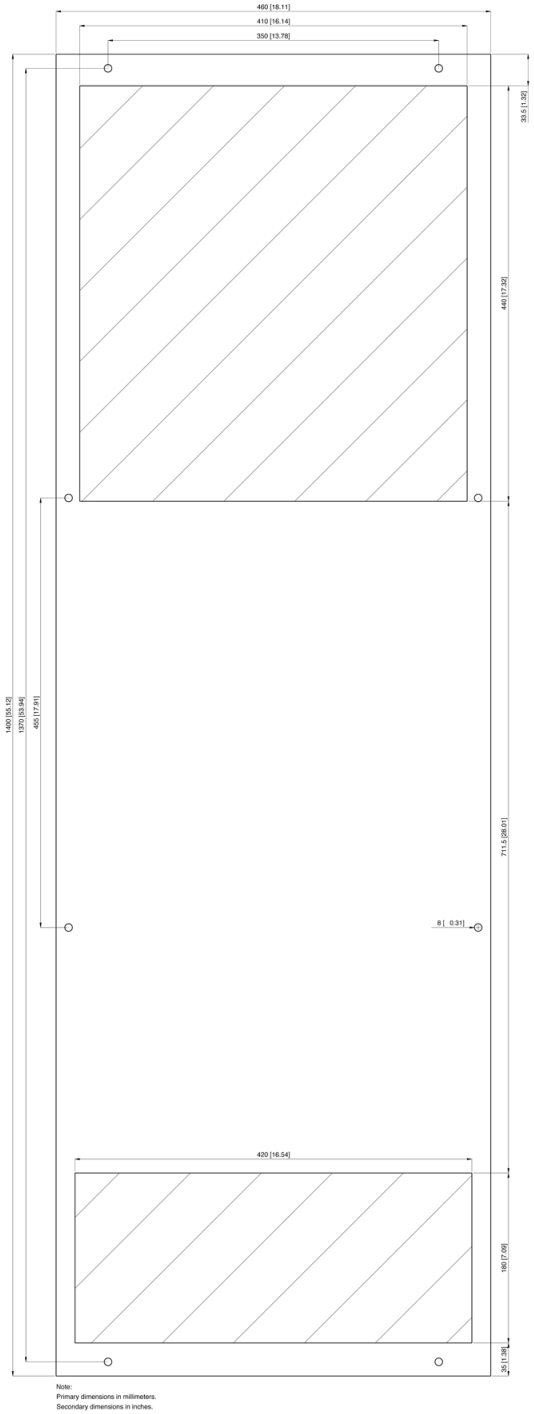

12. Electrical Connection

High electric voltage present. Installation, maintenance, cleaning and any other work must be carried out by qualified personnel only. The personnel must ensure that for the duration of this work the unit and the cabinet are disconnected from the electrical supply and protected against unauthorised/accidental reconnection.

Connection to the main electrical supply

The mains connection is made via a connection terminal. To connect the unit to the mains proceed as follows:

- Take the control cabinet out of operation in the prescribed manner.
- See the connection details on the circuit diagram.
- Note the connections on the connector / terminal block from the following table

Terminal 120V 1~

L1	Live (black)
N	Neutral (blue)
PE	Protection- Earth (green / yellow)
P1	Alarm contact (brown)
P2	Alarm contact (grey)
P3	Alarm contact (violet)

Ensure that the correct polarity is maintained. The fans should have clockwise rotation.

- Connect the unit to the mains.
- Take the control cabinet back into operation in the prescribed manner.
- Power consumption and start-up current are stated on the data label and under technical data.

13. Wiring Diagram

M1	Radial fan
F1	Thermal motor protector
C1	Start capacitor
X1	4 - pole connector
X2	6 - pole connector
A1 & A2	Change-over thermostats
Y1	Magnetic valve

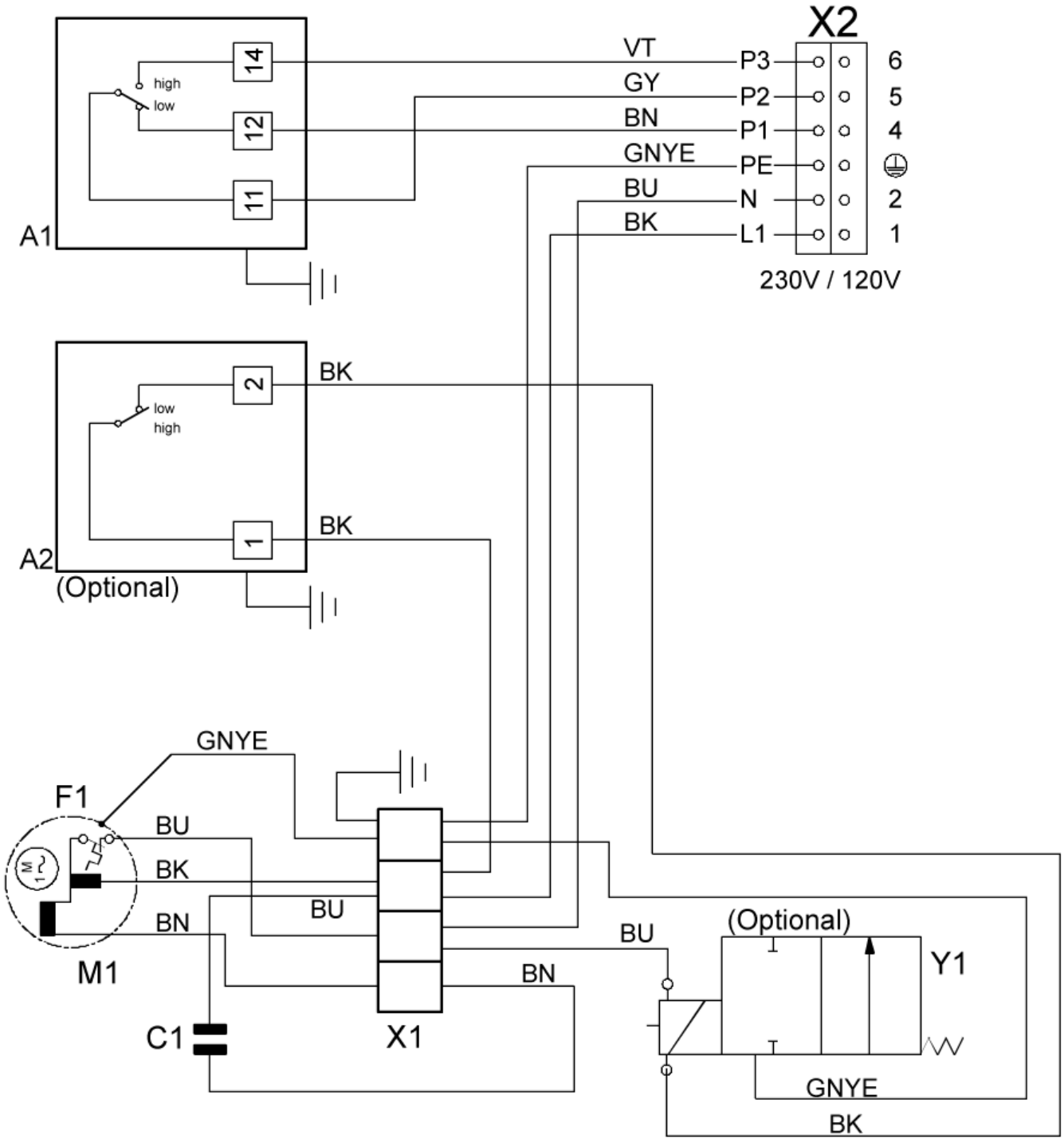

14. Taking into Operation

The cooling performance of the heat exchanger is dependent on the water flow rate available from the supply. The water flow is dependent on the water supply system to which the heat exchanger is connected and is affected by various factors, such as conduit pressure, conduit diameter, etc.

1. Units with water flow regulator

It is possible to adjust the water flow rate from the supply system to provide the cooling performance actually required. Operation is controlled according to a pre-set control cabinet temperature. The control cabinet temperature is measured by a temperature sensor situated in the intake air flow. If the target temperature is exceeded, the water flow regulator opens the water circuit. If the temperature falls below the target temperature, the flow regulator closes the water circuit. In this way, the heat exchanger works more efficiently by saving water.

(a) with proportional water flow regulator (RK 2114 A632 & A891, RK 2116, RK 2124, RK 2194): max. water flow 350 l/h

(b) with magnetic valve (RK 2125, RK 2149, RK 2192, RK 2197): max. water flow 500 l/h

1.1 Adjustment of the water flow regulator

Before opening the unit make sure that there is no supply voltage at the unit. Remove the fixing screws to open the cover of the unit. To set the flow rate (Q) turn the thermostatic head. Set the indicator position to the required cabinet temperature. The work's setting of the water flow regulator is +35°C. The adjustment range is +20°C to +50°C.

Temperature setting look-up table

Pos.	˚C
1	20
2	25
3	30
4	35
5	40
6	45
7	50

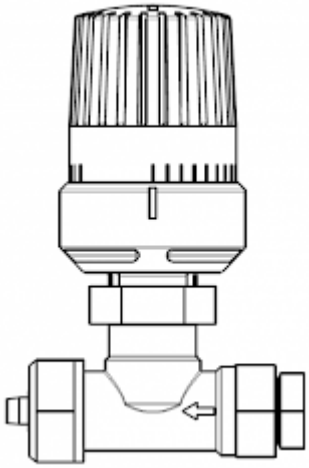

Setting

Turn clockwise or anti-clockwise to change operating temperature.

Operation

If cabinet temperature changes, the sensing bulb detects the change and results in open and closing of the flow. If cabinet temperature increases more than the set value, the valve gradually opens and vice versa.

Warning: Since valve is purely mechanical, the valve will still actuate itself even when the unit is not powered. Flush unit from fluids, prior to transportation to prevent any damage.

2. Units without water flow regulator

These units do not have any automatic control functions.

3. Units with Alarm Thermostat

With these units the cabinet air temperature can be monitored via a current free sensor which monitors the cabinet air as it enters the unit. Before opening the unit always make sure that there is no supply voltage at the unit. To set the target temperature turn the adjustment screw on the thermostat until the dial reads the correct target temperature. The numbers on the adjustment scale show the temperature at which the alarm circuit is closed. The Thermostat can be set to a temperature anywhere between +20°C and +60°C. The work's setting of the thermostat is 45°C.

4. Units with Solenoid valve

The solenoid valve is switched electrically. If the unit power is off, the valve switches to open.

5. Units with temperature controller

The unit is equipped with a temperature controller which regulates the function of the unit. On normal working conditions the display shows the temperature inside the enclosure. The controller “set point” for the interior of the enclosure (parameter St / St1) is pre-set at 35°C and can be adjusted between +20°C and +50°C.
The High temperature alarm (parameter AH) is preset at 55°C. The High Temperature Alarm relay is delivered as “normally closed” (H1=1). If you need to change it to “normally open”, please modify value of parameter H1 (H1=2).

Modifying controller parameters

1. Press the SET button for more than 3 sec. (if there are active alarms, mute the buzzer).The display shows the parameter code ‘PS’ (password).
2. Only for parameters requiring password: Press the SET button to access the password setting, use the UP and DOWN buttons to scroll the numbers until displaying, “22” (default password to access the parameters), press the SET button to confirm the password
3. Use the UP and DOWN buttons to scroll the parameters. The LED corresponding to the category of parameters will be on
4. Press SET to display the value associated with the parameter
5. Increase or decrease the value using the UP or DOWN button respectively
6. Press SET to temporarily save the new value
7. Press the SET button for more than 3 sec. to permanently save the new parameters and exit the parameter setting procedure.

If no button is pressed for 60 sec. all changes made to the parameters, temporarily saved in the RAM, will be cancelled and the previous settings restored. The cooling unit manufacturer is in no way liable for any alterations the customer may make to the factory set parameters, unless the manufacturer has authorized the customer in writing to change them.

This manual is intended as quick reference for controller, for a full controller manual or if you need to restore the factory parameters please go to our website to download the full manual or to locate your nearest servicing office.

6. Units with door switch

The unit can be switched on and of via a door contact switch (optional). When delivered the door contact terminals are bridged on the female connector. To connect the door contact switch remove the bridge and connect door contact switch. The contact must be closed when the cabinet door is closed.

15. Maintenance

Every unit is given a performance test under load at the factory. The units are largely maintenance-free, however, the following points should be observed:

1. Fan replacement
Before replacing the fan, the equipment must be switched off from the power supply (pull out mains plug or connecting cable). The rated life time of the fan is L10 = 30.000 hours under normal operational conditions. Should it become necessary to replace the fan, remove the support for the fan by loosening the 4 fastening screws (RK-2114 models only). To detach the fan from the fan support loosen a further 4 screws and the fan connecting cable.
When connecting the new fan, take care that the correct polarity is maintained.

2.Thermostat replacement
Before replacing the thermostat, isolate the equipment from the power supply (pull out mains plug or connecting cable). Detach the thermostat from its support by unclipping it from the DIN railing and loosening the 4 connecting cables.
When connecting the new fan make sure that the correct polarity is maintained.

3. Environmental protection
If the heat exchanger has reached its end of life state, we will dispose it if it is returned to us freight paid.

4. Maintenance work on the cooling circuit
All the maintenance operations described above should only be carried out by expert personnel. All work on the cooling circuit should only be carried out at the factory.

16. Transport & Storage

Malfunction due to transport damage. During transport and storage the heat exchanger must be kept in the position marked on the box and at a temperature between -40˚C and 70˚C and a relative humidity of max. 95% (at 25°C). Check the packaging has not been damaged during shipping.

Damage to the unit through incorrect transport. Please ensure that all liquid has been removed prior any transport.

To avoid transport damage the unit should be returned in the original packing or in a packing case and must be strapped to a pallet. If the unit cannot be returned in the original packing please ensure that:

- A space of at least 30 mm must be maintained at all points between the unit and the external packing.
- The unit must be firmly fixed in the packing.
- The unit must be protected by shock -resistant padding (hard foam corners or cardboard corners).

17. Parts supplied / Spare parts / Accessories

Description	QTY	Image
Instruction manual	1	
CE Declaration	1	
M6 * 25 Slotted stud	8	
A6.4 washer	8	
M6 nuts	8	
Drain pipe	1	
Brass hose connector	2	
PVC washer	2	
Drain pipe socket	1	
Female connector	1	
Foam tape		

Seifert Systems GmbH
Albert-Einstein-Str. 3

42477 Radevormwald
Germany
Tel.+49 2195 68994-0
info.de@seifertsystems.com

Seifert Systems Ltd.
HF09/10
Hal-Far Industrial Estate
Birzebbuga, BBG 3000
Malta
Tel.+356 2220 7000
info@seifertsystems.com

Seifert Systems AG
Wilerstrasse 16

4563 Gerlafingen
Switzerland
Tel.+41 32 675 35 51
info.ch@seifertsystems.com

Seifert Systems GmbH
Bärnthal 1

4901 Ottnang
Austria
Tel.+43 7676 20712 0
info.at@seifertsystem.com

Seifert Systems Ltd.
Rep. Office

26100 Cremona
Italy
Tel.+39 349 259 4524
info@seifertsystems.com

Seifert Systems Inc.
75 Circuit Drive
North Kingstown
RI 02852
USA
Tel.+1 401-294-6960
info.us@seifertsystems.com

Seifert Systems Pty Ltd.
105 Lewis Road
Wantirna South
3152 Victoria
Australia
Tel.+61 3 98 01 19 06
info@seifertsystems.com.au